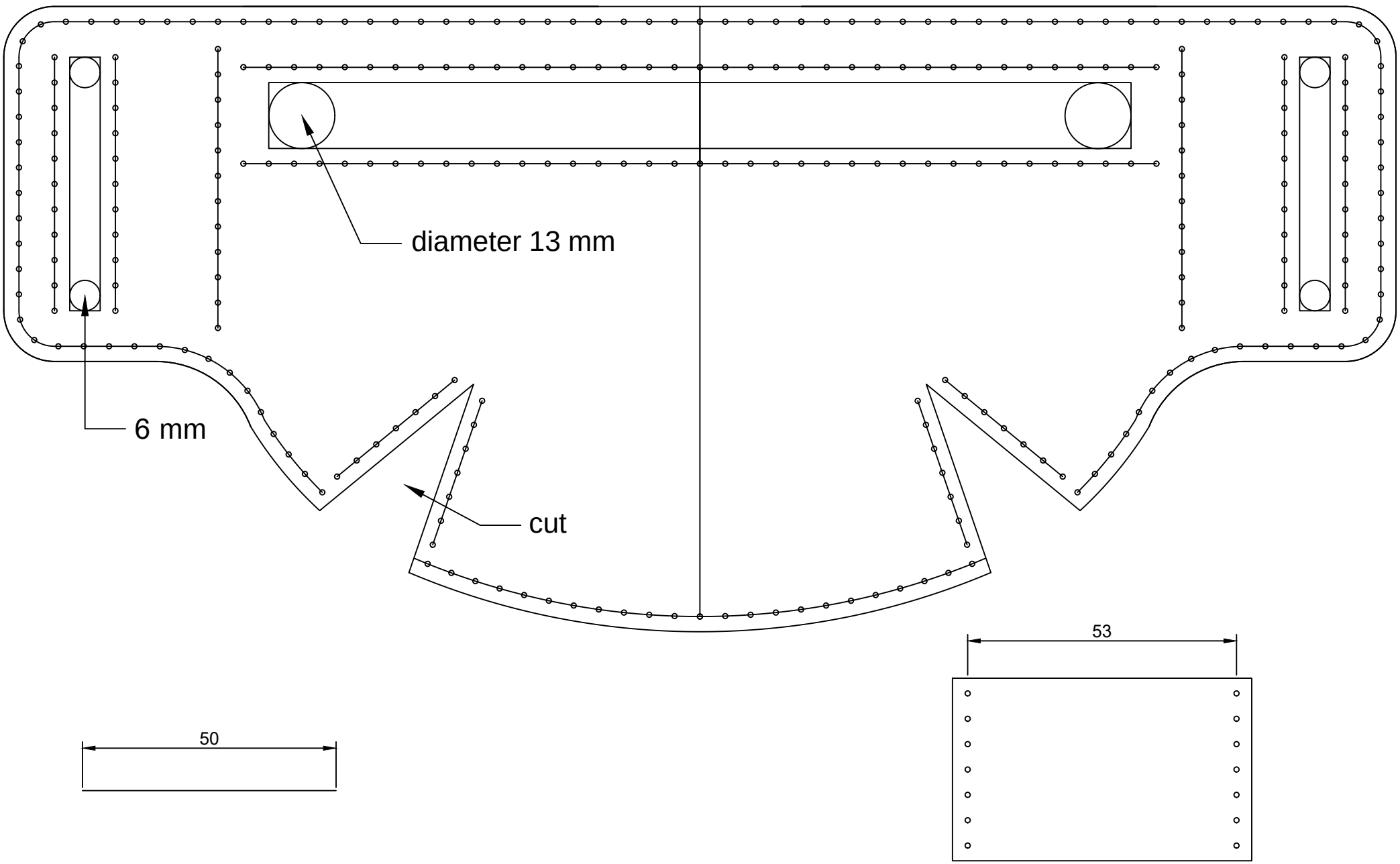
diameter 13 mm
6 mm
cut
53
50