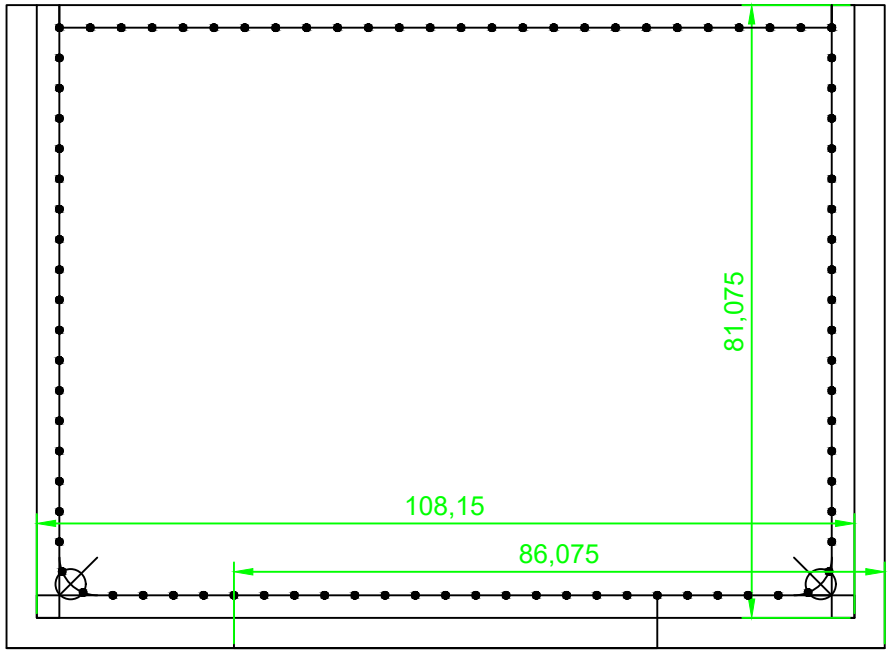
81,075
108,15
86,075

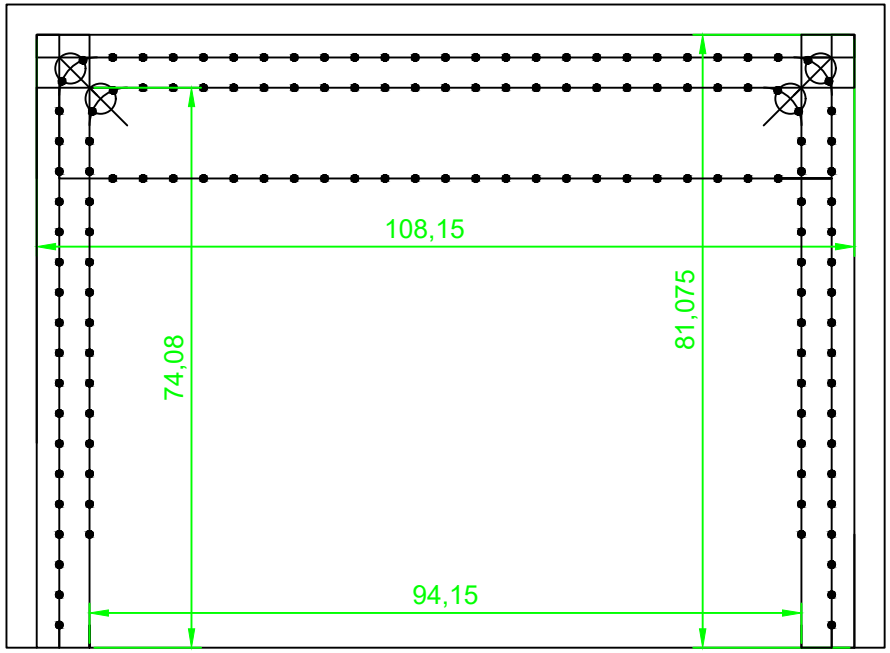
108,15
81,075
74,08
94,15

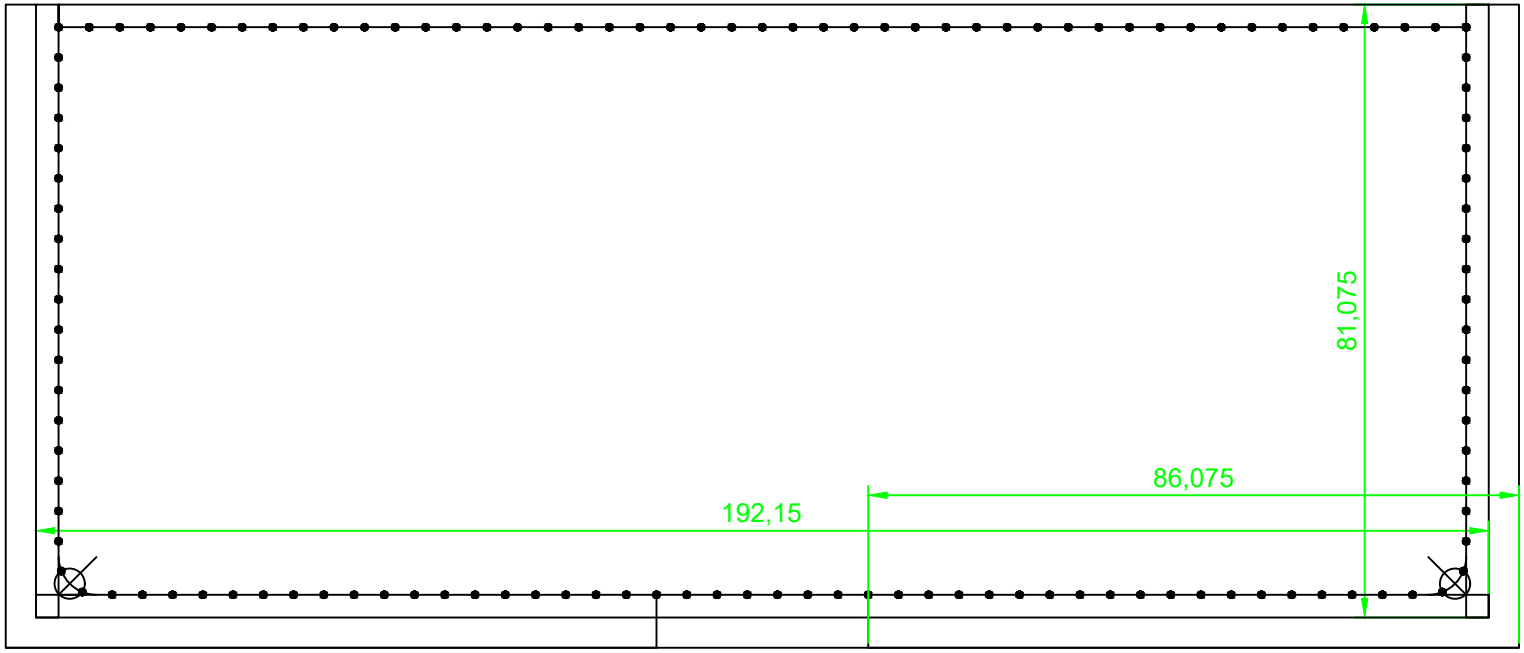
81,075
86,075
192,15